Stainless steel wall-mounted rangehood for recirculation operation with E.ion system for superior air hygiene.

Product Features

Motor Type	On Board
Filtration Type	Top Filter x 3 Carbon.Zeo Filter x 2
Controls	Touch Controls + Leaf Sensor
Speed Settings	3 Speed + Boost + Auto Sensor
Ducting	Recirculating

E.ion® System

Dimensioned Drawings

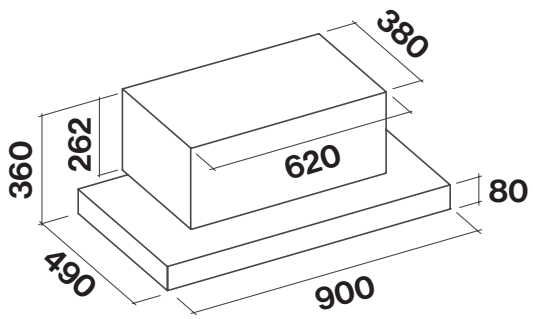

Model Code	Hood Mounting	Size	Motor Output	Lighting	Finish
F5LB90S1	Wall	90 cm	600 m^3/hr	LED 3 x 1.2 W (3200 K)	Stainless