# FTC632XSAU
# 60CM SLIDE OUT RANGEHOOD

## PRODUCT INFORMATION

| | |
|---|---|
| **Overall Dimensions (mm)** | 598(W) x 196(H) x 300(D) |
| **Power** | 220-240V 50Hz, 118W max |
| **Number of Fan Speeds** | 3 |
| **Control Interface** | Slide Controls |
| **Noise Level** | 62dB |
| **Lighting** | Twin LED |
| **Air Outlet** | ø120mm |
| **Filter** | 2x Aluminum Mesh Filters (Dishwasher Safe) |
| **Air Flow** | 380m³/h |
| **Finish** | Stainless Steel Trim |
| **Warranty** | 2 Years |

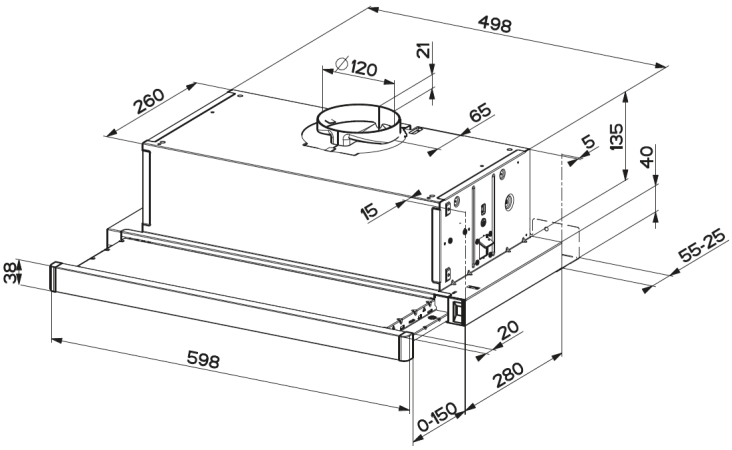


**SIDE VIEW**

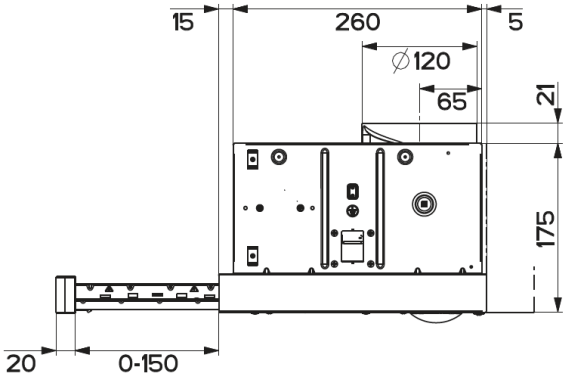


**PLEASE NOTE:** Technical and product specifications may change; therefore, cut-outs for appliances should only be by physical product measurements. The above information is indicative only.

LAST UPDATED: 14 NOV 2019